IMPORTANT: READ THESE INSTRUCTIONS CAREFULLY. NOTE THE SAFE OPERATIONAL REQUIREMENTS, WARNINGS AND CAUTIONS. USE THE TOOL CORRECTLY AND WITH CARE FOR THE PURPOSE FOR WHICH IT IS INTENDED. FAILURE TO DO SO MAY CAUSE DAMAGE AND/OR PERSONAL INJURY AND WILL INVALIDATE THE WARRANTY. PLEASE KEEP INSTRUCTIONS SAFE FOR FUTURE USE

1. SAFETY INSTRUCTIONS

❒ **WARNING!** *Ensure Health and Safety, local authority and general workshop practice regulations are adhered to when using tools.*

✗ **DO NOT** use tools if damaged.

✓ Maintain tools in good and clean condition for best and safest performance.

✓ Ensure that a vehicle which has been jacked up is adequately supported with axle stands and that the wheels are chocked, refer to the vehicle manufacturer's service instructions, or a proprietary manual.

✓ Wear approved eye protection. A full range of personal safety equipment is available from your Sealey dealer.

✓ Wear suitable clothing to avoid snagging. Do not wear jewellery and tie back long hair.

✗ DO NOT use air tools to operate the force screw.

❒ ***IMPORTANT:*** The force screw must be kept well lubricated.

IMPORTANT: ***This manual is provided as a guide only, refer to the vehicle manufacturer's service instructions, or a proprietary manual, to establish the current procedure and data.***

❒ **WARNING!** Failure to heed safety and warning instructions may result in damage and/or personal injury and will invalidate the warranty.

❒ **WARNING!** ***The warnings, cautions and instructions referred to in this manual cannot cover all possible conditions and situations that may occur. It must be understood that common sense and caution are factors which cannot be built into this product, but must be applied by the operator.***

ALWAYS KEEP FORCE SCREW WELL LUBRICATED.

DO NOT USE AIR TOOLS

Force screw maximum load 150Nm. Exceeding this load will shorten the life of the force screw. The force screw is considered to be a consumable item and is NOT covered under warranty.

2. INTRODUCTION & APPLICATIONS

Suitable for the removal / installation of the rear mounting bush on the front lower wish-bone. Can be used in situ without the need to remove the aluminium housing. Use with a 24mm spanner only.

Applications:

- **SEAT:** **Codoba III (2003 on)**
- **SKODA:** **Fabia (2000 on)**
- **VW:** **Polo IV (2002 on)**

3. OPERATION

NOTE! Pictures taken with the wish-bone removed from it's housing for clarity. Refer to the vehicle manufacturer's service instructions, or a proprietary manual to carry this out.

The pictures are of an off-side bush being replaced.

NOTE! This tool will insert the bush to the correct depth, but before installing the new bush, refer to the vehicle manufacturer's service instructions, or a proprietary manual, to establish the correct horizontal alignment/positioning of the bush.

IMPORTANT: This tool is designed to aid removal of the bush.

- We suggest that the area around the bush is thoroughly cleaned.
- The threads of the tool should also be thoroughly lubricated in use.
- **An Impact Socket must NOT be used with this tool.**
- **Stripped threads and bent thrust cups are not accepted warranty claims on this tool.**

3.1. Removing Bush

3.1.1. Assemble the removal (silver) set as in Fig.1. Thread the Adaptor (A) onto the short threaded end of the bolt (F) with the ridged side facing forwards. Pass the bolt through the bush from the rear and then position the large Adaptor (B) over the bolt, fitting it against the housing with the cut-out facing inwards and the small recess fitted over the rubber locator on the bush. Thread the nut (E) onto the bolt and wind it up to the adaptor. Double check to make sure that everything is aligned.

Fig.1

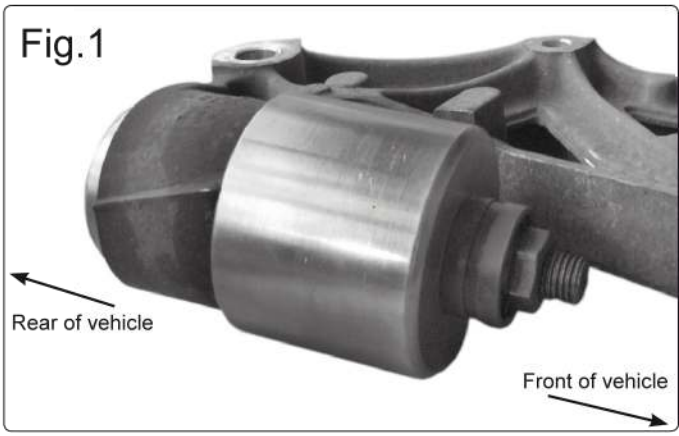

3.1.2. Using a 24mm spanner, turn the nut clockwise. The extractor will start to extract the bush through the housing (Fig.2).

3.1.3. Keep turning until the bush has been extracted all the way out of the housing. Take care as the bush and assembly will fall away when the bush is fully removed.

NOTE! If any undue resistance is felt, remove the assembly and check everything is correctly aligned. The bush will only push out in one direction.

Fig.2

3.2. Installing new bush.

3.2.1. Before installing a new bush, clean the inside of the housing.

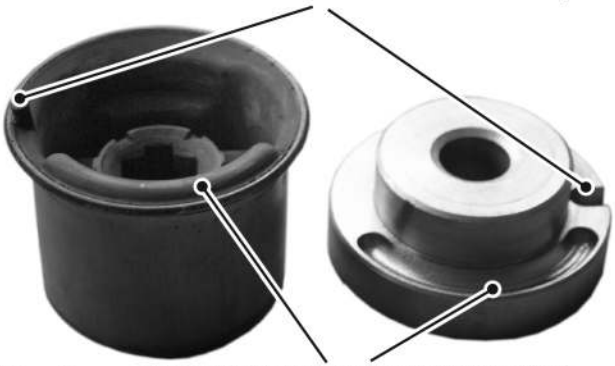

Fig.3

3.2.2. Assemble the installation (gold) set on the housing as in Fig.4 - viewed from below, and Fig.5. Adaptor (D) is threaded onto the short threaded end of the bolt (F) with the ridged side facing inwards. Pass the bolt through the housing from the rear and then through the bush and then position the Adaptor (C) over the bolt, fitting it against the bush.
To facilitate correct positioning of the bush, the installation adaptor (C) has 2 recesses that align with the face of the new bush (Fig.3). The bush should then be aligned in the housing so that the rubber locator on the bush is facing directly downwards (Fig.4). Thread the nut (E) onto the bolt and wind it up to the adaptor. Double check to make sure that everything is aligned and that the bush is sitting squarely against the housing.

Fig.4

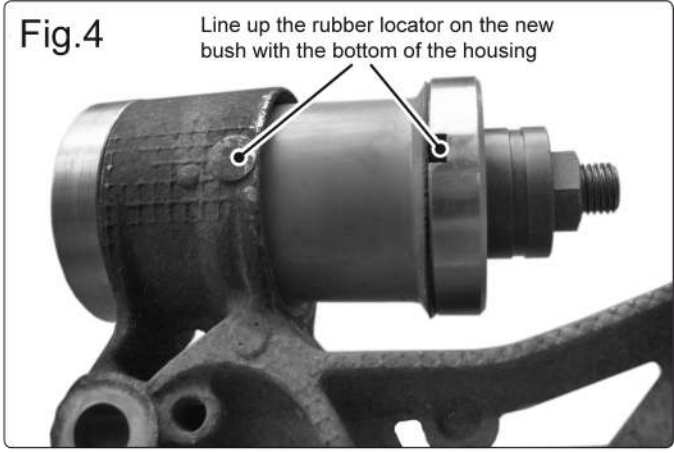

3.2.3. Using a 24mm spanner, turn the nut clockwise. The bush will start to be pushed into the housing.
NOTE! If any undue resistance is felt, remove the assembly and check that everything is correctly aligned.

3.2.4. Continue to turn the nut to install the bush, when the bush reaches the housing, resistance will be felt and the bush is fully installed (Fig.6).

3.2.5. Disassemble the tool, clean and lubricate before returning the parts to the storage case.

3.2.6. Re-fit the wish-bone as per the vehicle manufacturer's service instructions or a proprietary manual.

Fig.5

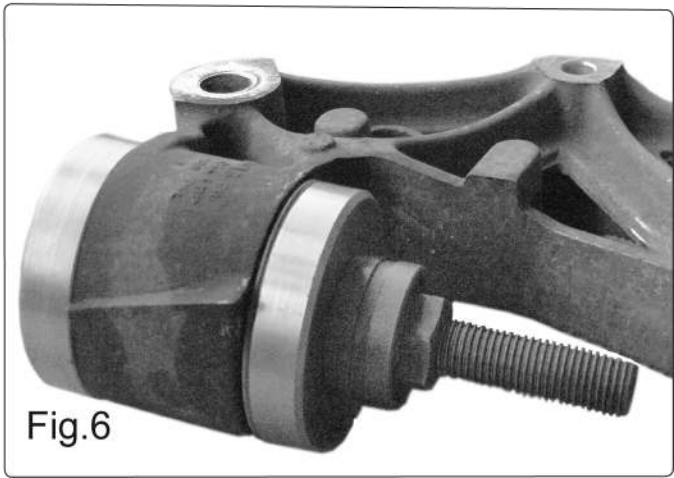

Fig.6